+38 (093) 744 92 56
levantindesign@gmail.com
levantindesign.com

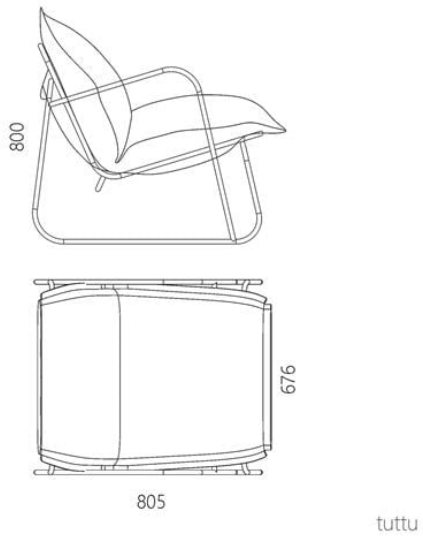

Armchair TUTTU Farmer

254 usd

- Withdrawn from series production and replaced by the universal TUTTU Monteur model.
- The chair is complemented by a TUTTU pouf table, on which you can put gadgets or rest your feet.
- Designed and manufactured in Ukraine, with love!

As children, my brothers and I loved to listen to grandfather's stories about life, begging for them at any opportunity, perched on the floor around the chair. And with which he spoiled us from time to time, slowly leading a leisurely thread of the story, with distractions to detailed details, sitting on his chair - the same lover of stories of the past! Inspired by childhood memories, we set about reincarnating an archaic object that became such a close and silent witness to us as we grew up. In our interpretation, the heroes of the past come to life, like a chameleon, taking on the surroundings of the story's setting. Working through the details of the collection and finishing materials, we created four brutal archetypes from the stories of our grandfather, associated with the types of activities we remember: Savant (engineer), Lumberer (woodcutter), Farmer (peasant), Aviator (pilot). Having abandoned the classic image, we left the form based on an open look, clear content and comfortable fit, naming the collection with the invented pleasant word Tuttu.

TUTTU Farmer poetizes folk life, evoking images of rural beauties, dreams of simple beauty, and the natural life of a person in the lap of nature, forming a unity of romantic memories and peasant folklore. Thanks to colorful textiles, with a catchy jacquard pattern, assembled in the manner of a patchwork mosaic, a pleasant feeling of walking through the countryside is achieved. In this look, a flowing metal frame and an enveloping soft part delicately overlap each other. A removable pillow, fastened with buttons, has an outer and inner cover for easy care and washing. The back of the TUTTU resembles a backpack, with a pocket for useful items. There is also a holder for magazines under the chair. This is our joint development together with the craft workshop Stas Litvinov Studio.

Designer: Sergey Lvov
Year of creation: 2019

Height:	800 mm
Width:	676 mm
Depth:	805 mm

Materials and instructions

Frame: 16 mm steel pipe, powder painting, floor protection pads. Soft part: removable outer cover: Italvelluti textile, Marengo 210 collection (Queens textile back, Caviar colour). Filling: holofiber. Care: Vacuum the outer cover regularly with the brush attachment. Fresh stains should be blotted immediately with a clean, absorbent cloth. The maximum load on the product is 200 kg.