+38 (093) 744 92 56
levantindesign@gmail.com
levantindesign.com



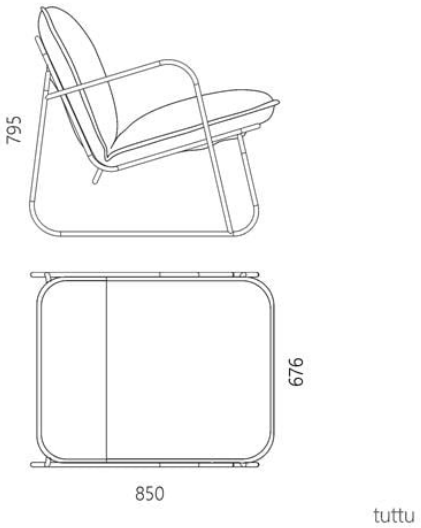

Fabric outdoor armchair TUTTU Monteur

359 usd

- The outdoor version is made of Korsyka and Kanaria waterproof fabric.
- Winner of the European Product Design Award 2023.
- Winner of the Portuguese design award LOOP Design Awards 2023.
- Winner of the American design award IDA Award 2022 Silver.
- Exhibited at the international exhibitions Maison&Objet, Barcelona Design Week, Warsaw Home&Contract, KIFF.
- Designed and manufactured in Ukraine, with love!

The Monteur outdoor armchair is an addition to the TUTTU series of the same name, reinforcing its versatile, functional character. Interchangeable upholstered parts have made it possible to create a family of modular armchairs united by a friendly design. The armchair takes its name from the French word for editor. Inspired by a person who thoughtfully cuts away the superfluous, leaving the very essence. Monteur has come to epitomise this craft, with its concise appearance and meticulous detailing. It is characterised by the rounded and harmonious shapes of the seat and backrest, set on a versatile steel frame. And the smooth cant line outlining the silhouette emphasises its clean image.

We've delved deeper into the upholstered section by creating a removable outer cover with two separate sections for the backrest and seat. It is quickly attached to the frame with convenient Velcro fasteners. The inner cushions consist of a combination of polyurethane foam, the main cushioning material, and felt padding for resilience. This has given the fit extra comfort and greater stability in use for years to come. Monteur is easy to personalise, thanks to the combination of a large palette of outdoor textiles.

Designer: Sergei Lvov
Year of creation: 2022

Height:	795 mm
Width:	676 мм
Depth:	850 мм

Materials and instructions

Frame: 16 mm steel tube, powder-coated, pads floor protectors. Upholstery: Korsyka and Kanaria outdoor textiles. Padding: polyurethane covered with lining.

Package information

Reliable cardboard packaging. Package quantity: 1 piece. 820x700x870 mm. Weight: 14 kg. The product is assembled.